

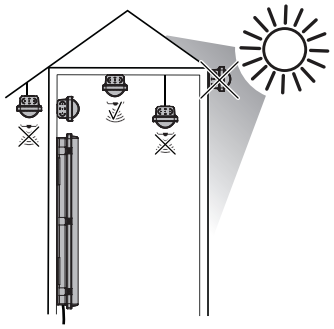

	L	H	W	F	E
600mm	650	88	89	370	100
1200mm	1200	88	89	820	200
1500mm	1500	88	89	1120	200

The luminaire is suitable for use in environments where an accumulation of conductive dust on the luminaire may be expected

1

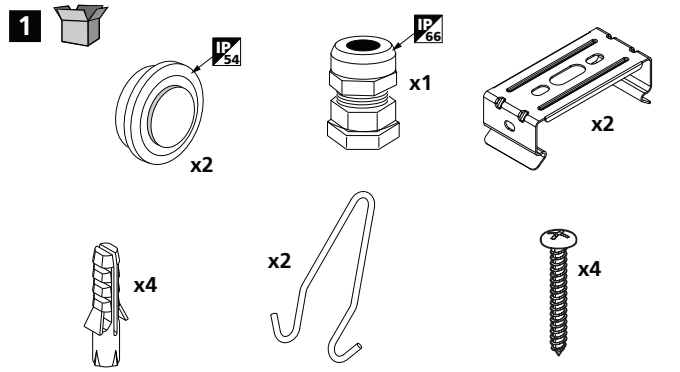

2

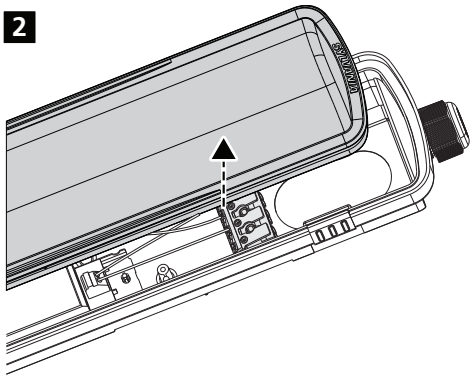

3 230-240V

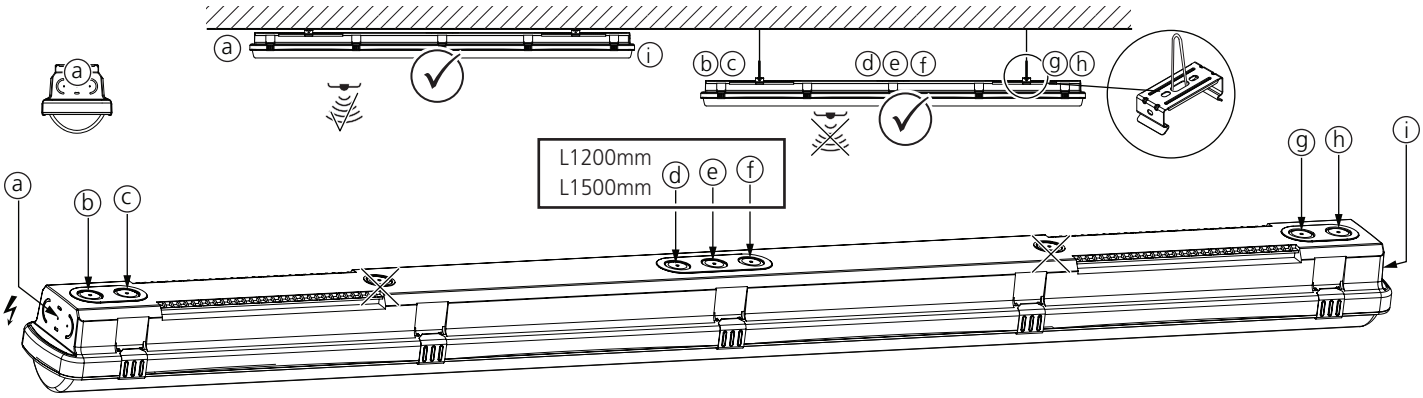

4 a to h ✓ i ✗

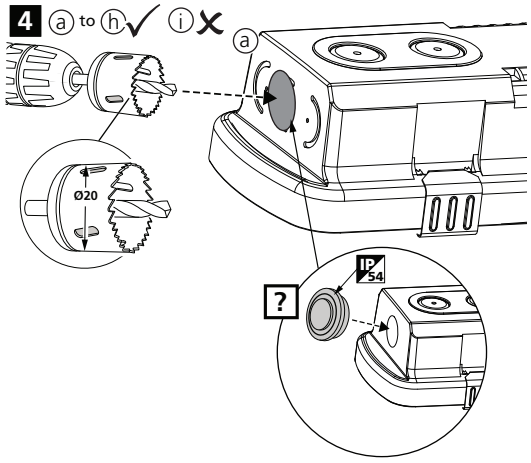

5

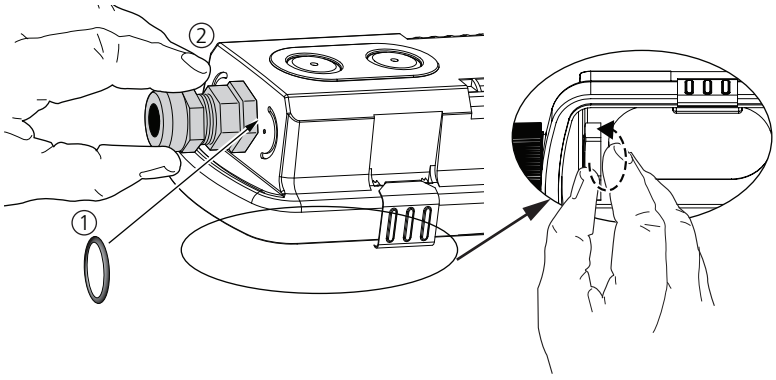

6

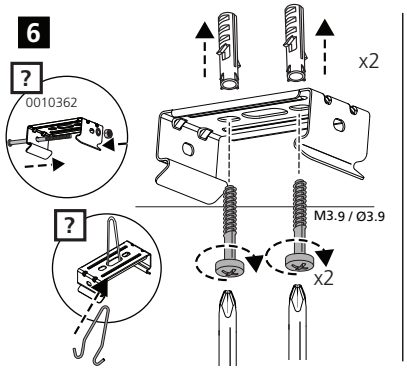

7

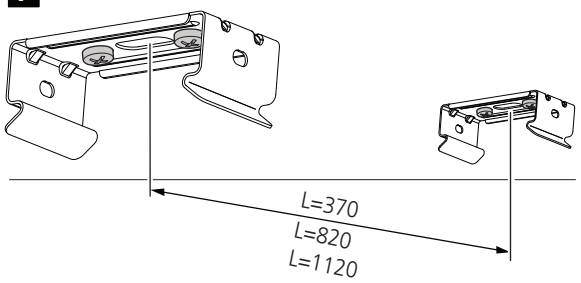

8

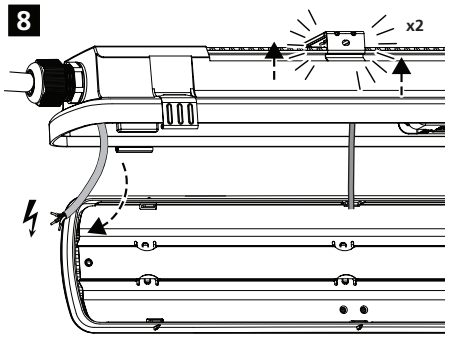

9 230-240V

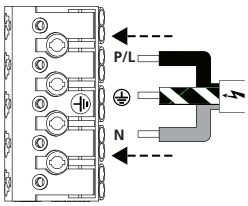

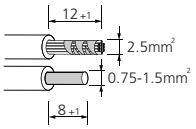

9 230-240V + DALI

Control wires are basic insulated to mains wires

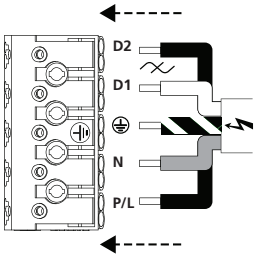

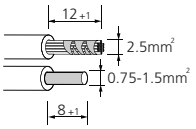

9 230-240V + + DALI

Control wires are basic insulated to mains wires

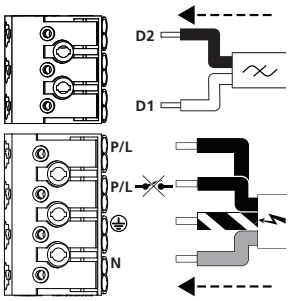

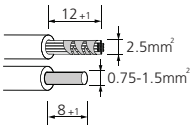

9 230-240V +

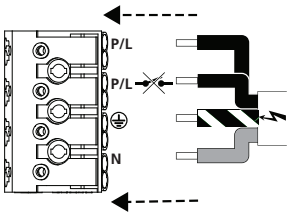

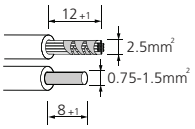

9 230-240V + 1-10V

Control wires are basic insulated to mains wires

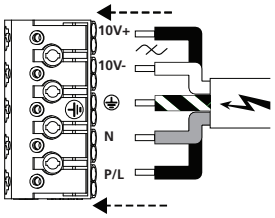

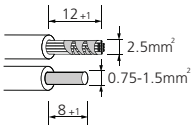

10

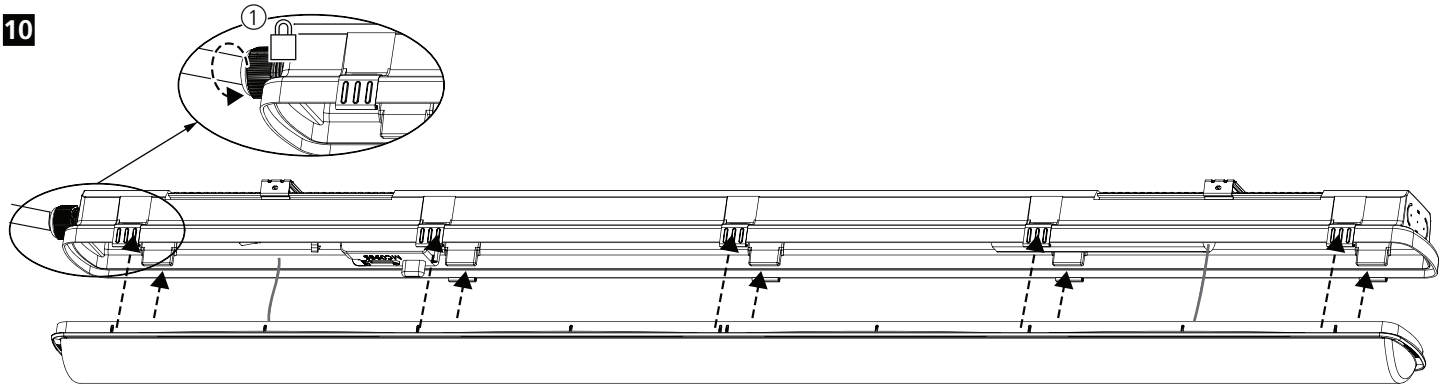

x6 - 600mm LED
x10 - 1200mm LED
x12 - 1500mm LED

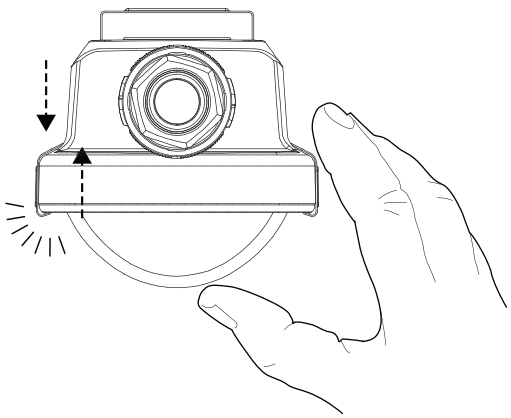

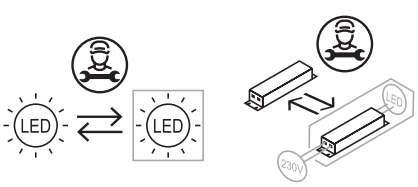
LED
LED
LED
230V

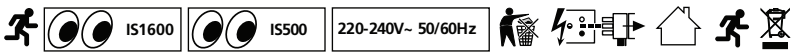
IS1600
IS500
220-240V~ 50/60Hz

1

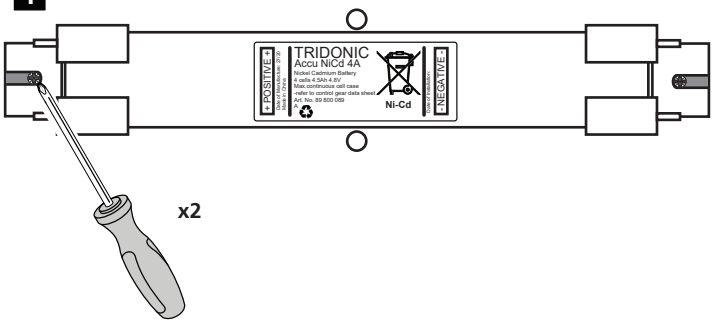
TRIDONIC
Accu NiCd 4A
+ POSITIVE +
- NEGATIVE -
Ni-Cd
x2

2

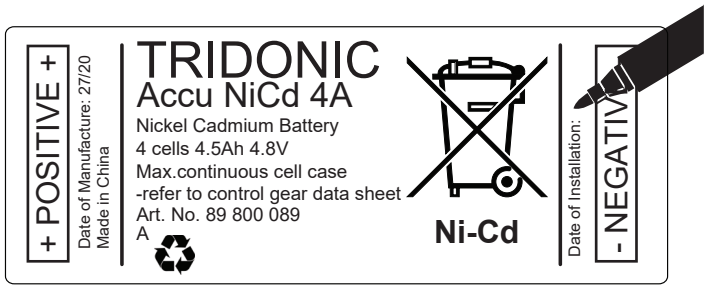
+ POSITIVE +
Date of Manufacture: 27/20
Made in China
TRIDONIC
Accu NiCd 4A
Nickel Cadmium Battery
4 cells 4.5Ah 4.8V
Max.continuous cell case
-refer to control gear data sheet
Art. No. 89 800 089
A
Ni-Cd
Date of Installation:
- NEGATIVE -

3

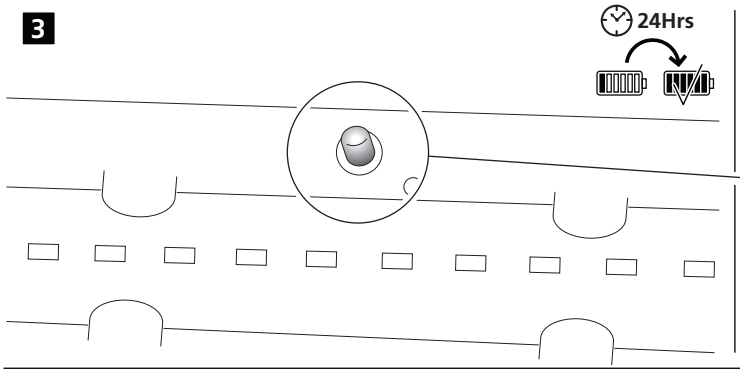
24Hrs

4

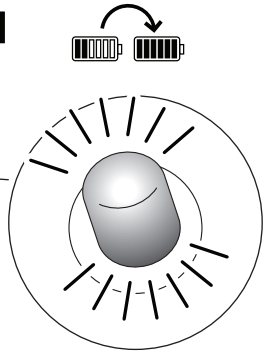

4

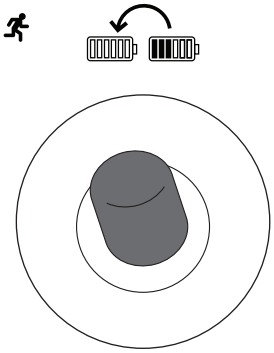

5

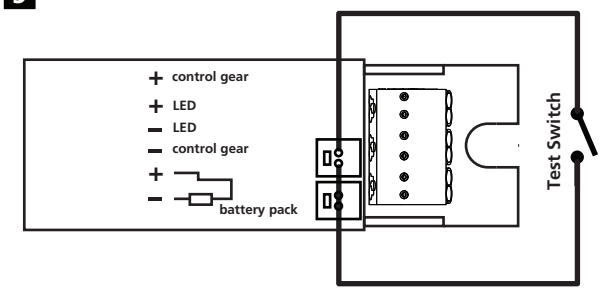
+ control gear
+ LED
– LED
– control gear
+
–
battery pack
Test Switch