Ledeshi



1.This product contains a light source of energy efficiency class < E >
2.Light Model: LDS-12C45B

Model	Voltage	Current	PF	Wattage	Luminous Flux	W/Φ (mm)	H (mm)	ta(℃)
Slice 120 DALI 38W/29W	220-240V~	0.17A/0.13A	0.95	38W/29W	4200/3200LM(Warm White) 4200/3200LM(Neutral White) 4200/3200LM(Cool White)	1200	130/55	40
Suitable Version: With Or Without Color Temperature Selectable Function. Color Temperature: Warm White:2700k-3200k Neutral White:3800k-4200k Cool White:6000k-6600k;								

RoHS CE IP54

Installation instruction

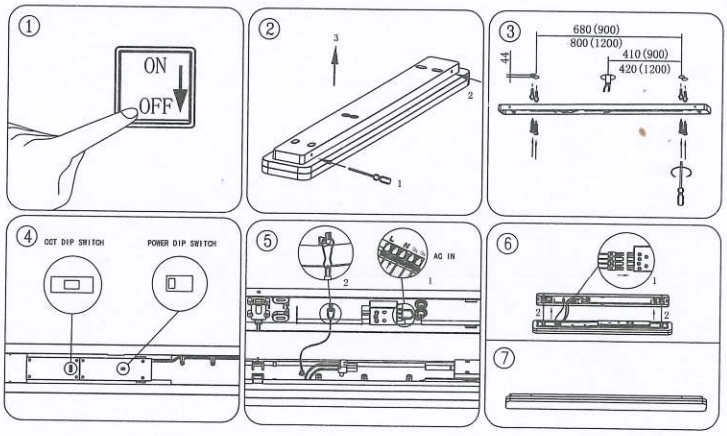

Light source disassembly instruction

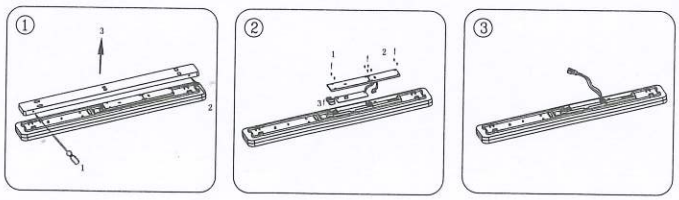

- Always follow this instruction to ensure correct and safe installation and functioning of the luminaire and keep it for future reference.
- Always isolate the power before commencing installation.
- If in doubt, consult a qualified electrician. Ensure that you always install the luminaire to the relevant regulations.

Correct Disposal of this product	
	This marking indicates that this product should not be disposed with other household wastes throughout the EU. To prevent possible harm to the environment or human health from uncontrolled waste disposal, recycle it responsibly to promote the sustainable reuse of material resources. To return your used device, please use the return and collection systems or contact the retailer where the product was purchased. They can take this product for environmental safe recycling.